DATA SHEET

BISO STRAINER
bottom inlet, side outlet

The Right Connection®

Suitable for applications where a high grade superior corrosion resistant stainless steel is required to filter liquids. Cast in duplex 2205 stainless steel this robust strainer with wing nuts and swing-down bolts requires no tools for service and maintenance. Suitable for use in marine environments, but also for commercial and industrial applications, straining oils, paint, chemicals, corrosive liquids, and any liquid that needs particles or contaminants removed to protect pumps, nozzles and injectors.

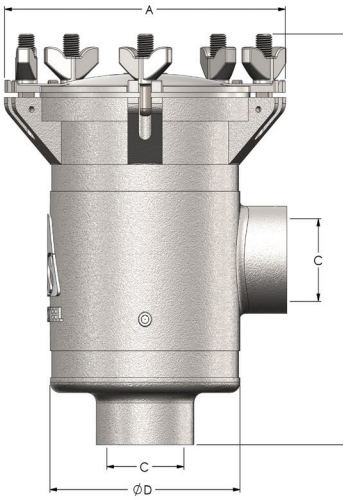

Applications
- Cooling systems on-board vessels
- Pumping dirty or contaminated liquids
- Protecting nozzles and injectors
- Highly corrosive liquids
- Large particles that may scour or destroy softer metals

Features
- Offset inlet and outlet for improved performance
- Secured by 5 wing nuts for safe, quick and easy access
- No tools required
- Swing down eye bolts eliminates need to remove nuts
- BSP thread inlet and outlet, flanges available on request
- Full height high impact resistant ABS basket
- Cast anode connection point to combat galvanic corrosion
- Drain plug

Materials
- Body: Electropolished AISI 2205 cast stainless steel
- Lid: Electropolished AISI 2205 cast stainless steel

Available Option
- 316 stainless steel basket (can be customised)
- Clear polycarbonate or solid lid

Size BSP (inch)	Part Number	Lid	Flow Rate	Lid Width A (mm)	Height B (mm)	Body Width D (mm)	Weight (kg)
1″	WS-BISO-100-C-A	Clear	425	150	235	95	2.90
	WS-BISO-100-S-A	Solid	425	150	235	95	3.10
1-1/2″	WS-BISO-150-C-A	Clear	903	150	235	95	3.05
	WS-BISO-150-S-A	Solid	903	150	235	95	3.15
2″	WS-BISO-200-C-A	Clear	1,375	200	272	140	5.70
	WS-BISO-200-S-A	Solid	1,375	200	272	140	6.20
2-1/2″	WS-BISO-250-C-A	Clear	1,974	200	272	140	5.90
	WS-BISO-250-S-A	Solid	1,974	200	272	140	6.25
3″	WS-BISO-300-C-A	Clear	3,103	235	332	164	11.55
	WS-BISO-300-S-A	Solid	3,103	235	332	164	12.30
4″	WS-BISO-400-C-A	Clear	5,710	273	474	220	18.15
	WS-BISO-400-S-A	Solid	5,710	273	474	220	18.95
6″	WS-BISO-600-S-A	Solid	13,538	360	510	310	32.00

Product Code: AS20

© 2020 APAC • BISO Strainer TDS_04.2021