DATA SHEET

Dixon Brass Ball Valve

The Right Connection®

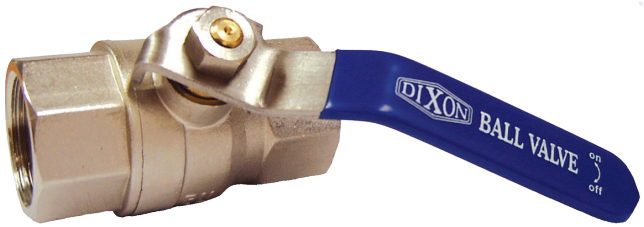

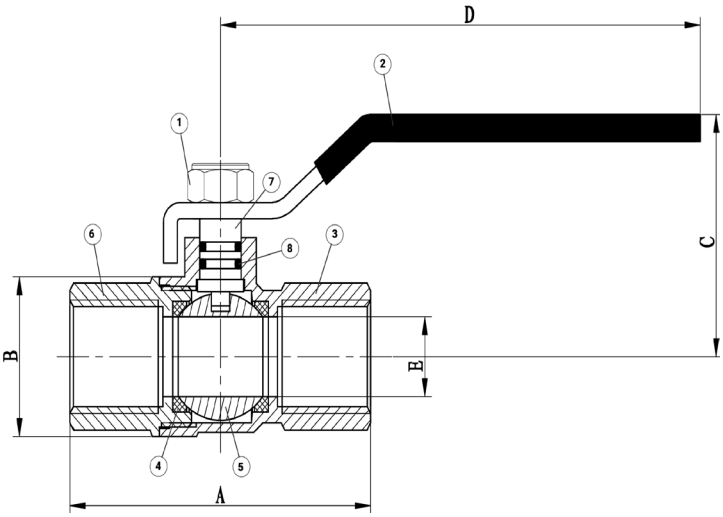

Application
- Recommended for general use with water, oil and gas

Features
- Robust in construction
- Blow-out proof stem design

Materials
- Body - Nickel plated brass with stainless steel handle
- Seat & Ball - PTFE seat and chrome plated brass ball
- Teflon seats, packing and thrust washer

Working Pressure:
- PN25 - 362 PSI

Operating Temperature
- -10°C - 110°C

Connecting Threads
- BSP

Notes
- Quarter turn is "ON" or "OFF". The valve is full open when the handle is parallel to the valve body
- Quarter turn the valve clockwise to make it full shutoff

Dimensions

Part Number	Size	Size (Inch)	A	B	C	D	E
BBVSTD006SS	8 mm	1/4"	45	23	39.2	87	9
BBVSTD010SS	10 mm	3/8"	45.8	23	39.8	87	10
BBVSTD012SS	15 mm	1/2"	59.4	29.5	54.2	95	14.8
BBVSTD020SS	20 mm	3/4"	67	35	57.6	95	19
BBVSTD025SS	25 mm	1"	77	42.7	60.6	126	24
BBVSTD032SS	32 mm	1 1/4"	93	53	75.8	140	30.2
BBVSTD040SS	40 mm	1 1/2"	99	63	81.3	140	37
BBVSTD050SS	50 mm	2"	117	79	88.5	165	47
BBVSTD065SS	65 mm	2 1/2"	143	102.5	121.5	224	62
BBVSTD080SS	75 mm	3"	165	120.5	129.5	224	74
BBVSTD100SS	100 mm	4"	190	144.5	141	283.5	90

Bill of Materials

Number	Part Name	Material	Plating	Quantity
1	Brass Yoke Nut	GB / T5231 - 2001 HPb 59-3	Nickel plated 2.5 µm	1
2	SS Handle with Plastic Cover	ASTM A 240-A 240M 304 SS	N/A	1
3	Brass Body	GB / T5231 - 2001 HPb 59-3	Nickel plated 2.5 µm	1
4	Sealing Seat	PTFE	N/A	2
5	Brass Ball	GB / T5231 - 2001 HPb 59-3	Chrome plated Ni=1.5 µm CR= 0.08	1
6	Brass Bonnet	GB / T5231 - 2001 HPb 59-3	Nickel plated 2.5 µm	1
7	Brass Stem	GB / T5231 - 2001 HPb 59-3	N/A	1
8	O-Ring	NBR	N/A	2

Dixon
1300 134 651
customerservice@dixonvalve.com.au
dixonvalve.com.au

© 2020 APAC • BrassBallValve August2020