DATA SHEET

100mm Shouldered Butterfly Valve

The Right Connection®

Lever operated Butterfly Valve for the Mining Industry.

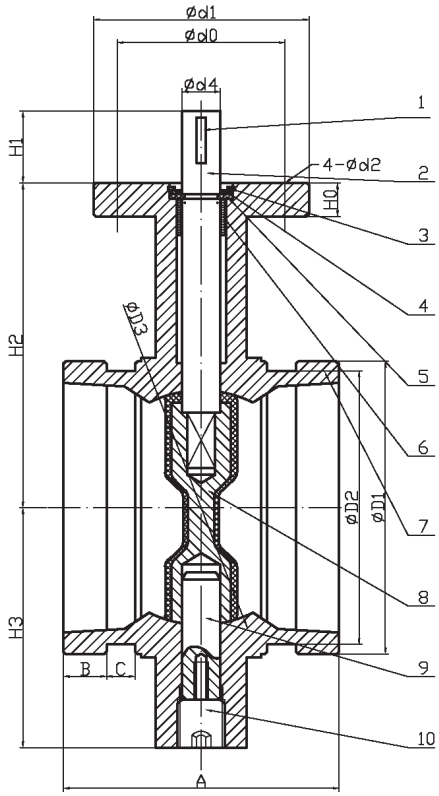

Features
- Lever operated
- Epoxy coated cast iron body
- Graduated cap

Working Temperature
- -12°C to 82°C

Working Pressure
- 1.6 MPa
- 232 PSI

Body Material

Key	Part	Material
1	Key	Carbon Steel
2	Top Stem	304SS
3	Gasket	304SS
4	Circlips	Spring Steel
5	Spilt Pad	304SS
6	Bushing	PTFE
7	Body	Cast Ductile Iron
8	IDML	Ductile Iron / NBR
9	Bottom Stem	304SS / 316SS / 416SS
10	Bolt	304SS

Size	H0	H1	H2	H3	d0	d1	d2	d3	d4	Stem	A	B	C	øD1	øD2	øD3
DN100 - 4”	14	32	135.4	100	70	90	10	55.5	15.77	11 x 11	115	18	12	122	114	96.2